TECHNICAL SHEET

TRACTOR DIMENSIONS

All measurements are in mm

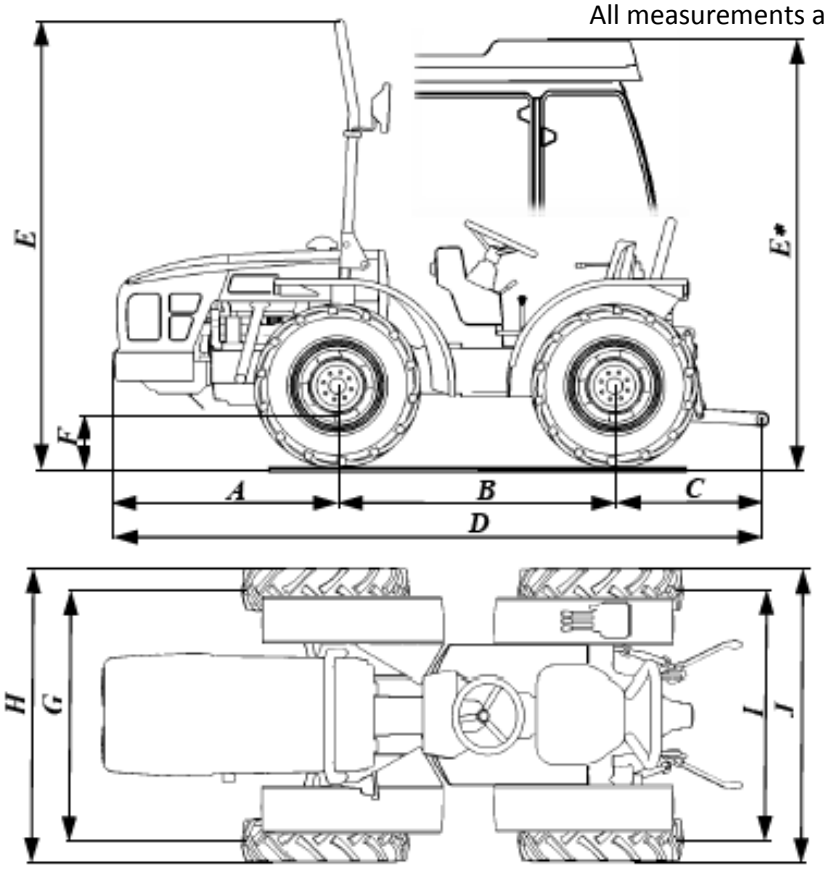

AGT 850		
A – distance between centre of front axle and end point of front part	standard	1093
	front hydraulics	1280
B – wheelbase		1337
C – distance between centre of rear axle and end point on implement		712
D – maximum length	standard	3142
	front hydraulics	3330
Axle length	front axle	1185
	rear axle	

Tyres	E	E*	F	G	H - J	I
7.5x16	2178	2058	279	See chapter "TRACTOR AXLE LENGTHS"	1266 – 1542	See chapter "TRACTOR AXLE LENGTHS"
260/70 R16	2164	2041	262		1421 - 1567	
250/80 R18	2214	2092	312		1299 - 1587	
280/70 R18	2201	2081	302		1470	
300/65 R18	2202	2081	302		1487	
31x15.5-15	2177	2056	277		ET 0 ⇒ 1579 ET +37 ⇒ 1505	
27x10.5-15	2119	1998	219		ET +5 ⇒ 1442	

* with cabin

TRACTOR AXLE LENGTHS

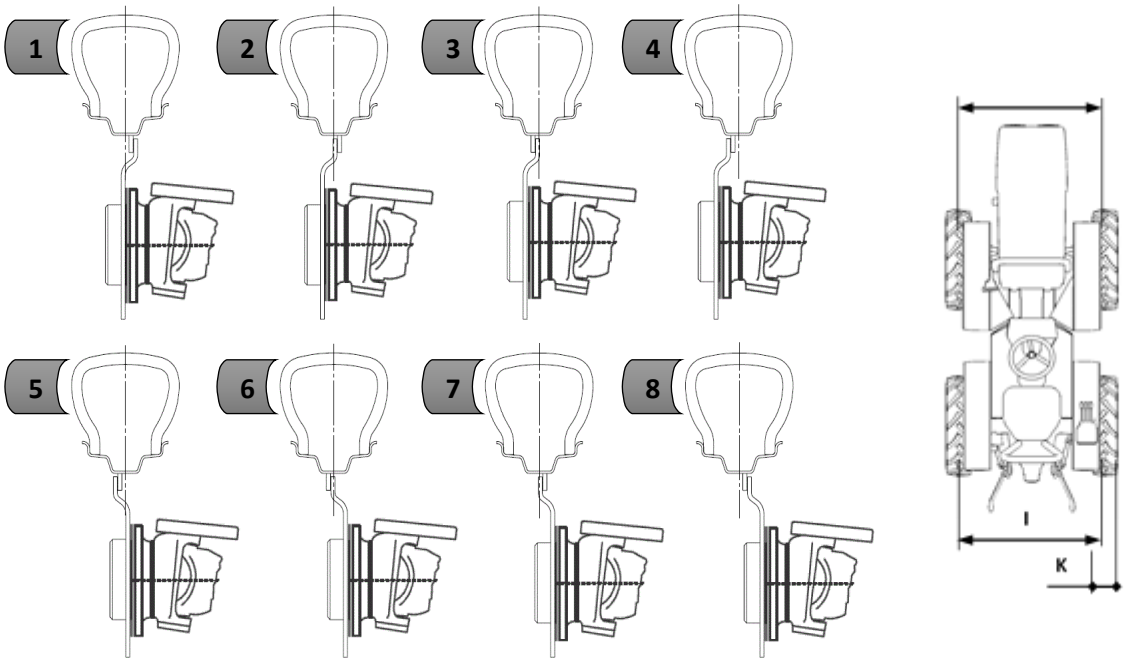

AGT 850						
		Tyres with adjustable rims				
Type	Dimensions (mm)	7,5x16	250/80 R18	260/70 R16	280/70 R18	300x65 R18
1	G	1235	-	1297	-	-
	I					
2	G	1170	-	1227	-	-
	I					
3	G	1122	-	-	-	-
	I					
4	G	1057	-	-	-	-
	I					
5	G	1155	1139	-	-	-
	I					
6	G	1220	-	1163	1187	1187
	I					
7	G	1268	-	1309	-	-
	I					
8	G	1333	-	-	-	-
	I					
	K	209	250	258	282	300
		Tyres with fixed rims				
Type	Dimensions (mm)	31x15,5-15		27x10,5-15		
ET 0	G	1185		-		
	I					
ET + 5	G	-		1175		
	I					
ET + 37	G	1111		-		
	I					
	K	394		267		

REAR LIFT MECHANISM DIMENSIONS

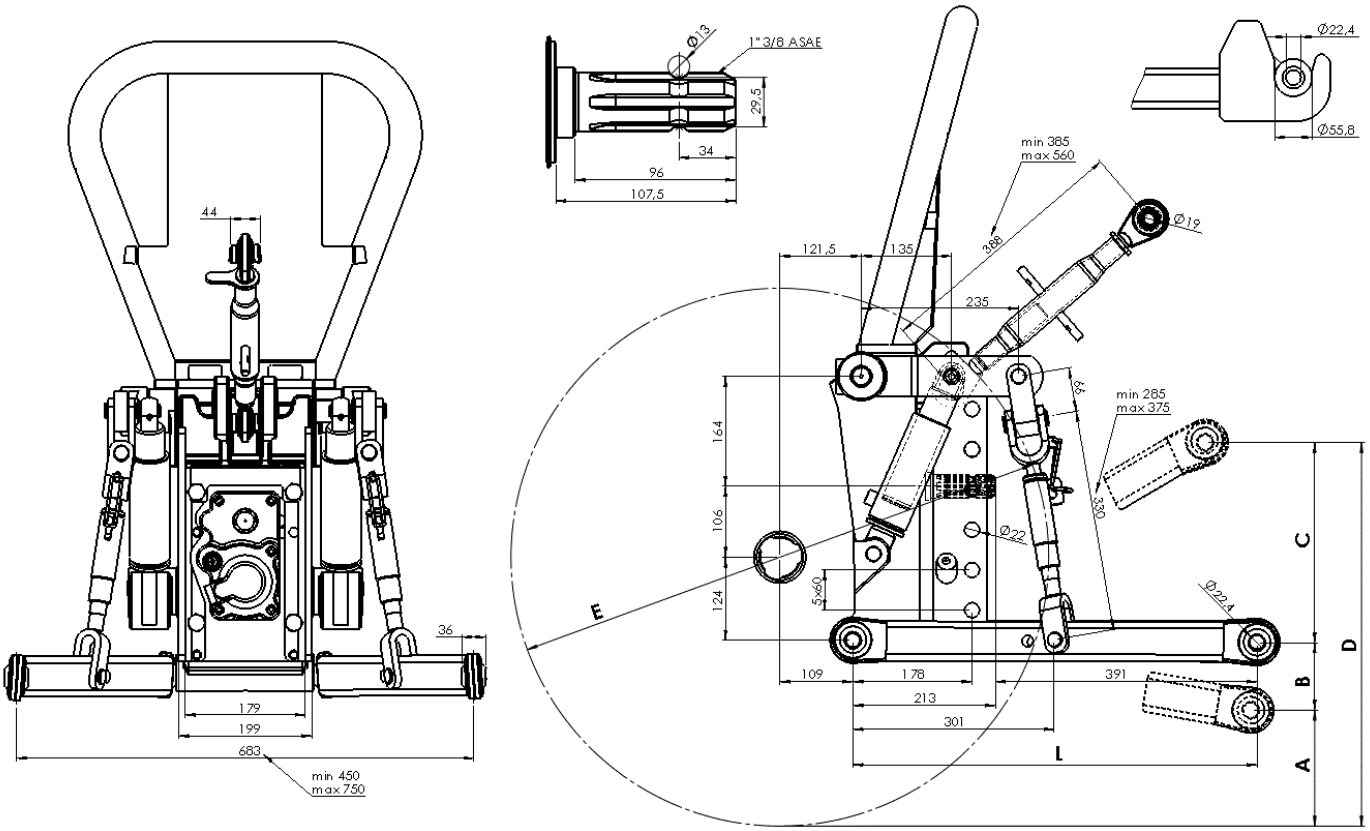

Height of rear lift mechanism according to tyres (measured from ground) and length of lift bar (set at 328 mm). All measurements are in mm.

AGT 850														
Tyres	E	L					A					B		
		L	L1	L2	L3	L4	A	A1	A2	A3	A4	B	B1	B2
7.5x16	803	603	500	554	607	660	169	163	151	140	129	104	110	123
260/70 R16	770						153	146	135	124	112			
250/80 R18	870						203	197	185	174	163			
280/70 R18	849						192	186	174	163	152			
300/65 R18	850						193	186	175	164	152			
31x15.5-15	800						168	161	148	139	127			
27x10.5-15	683						109	103	91	80	69			
		B		C					D					
		B3	B4	C	C1	C2	C3	C4	D	D1	D2	D3	D4	
7.5x16	803	135	148	290	301	335	369	402	563	574	609	644	679	
260/70 R16	770								546	558	593	628	662	
250/80 R18	870								597	608	643	678	713	
280/70 R18	849								586	597	632	667	702	
300/65 R18	850								587	598	633	668	702	
31x15.5-15	800								561	573	608	643	677	
27x10.5-15	683								503	514	549	584	619	

E – wheel diameter
L – length of lower connection arm, (L1, L2, L3, L4 – adjustable arms)
A – minimum height of rear lift mechanism
B – maximum arm lowering
C – maximum arm lifting
D – maximum height of rear lift mechanism

FRONT LIFT MECHANISM DIMENSIONS

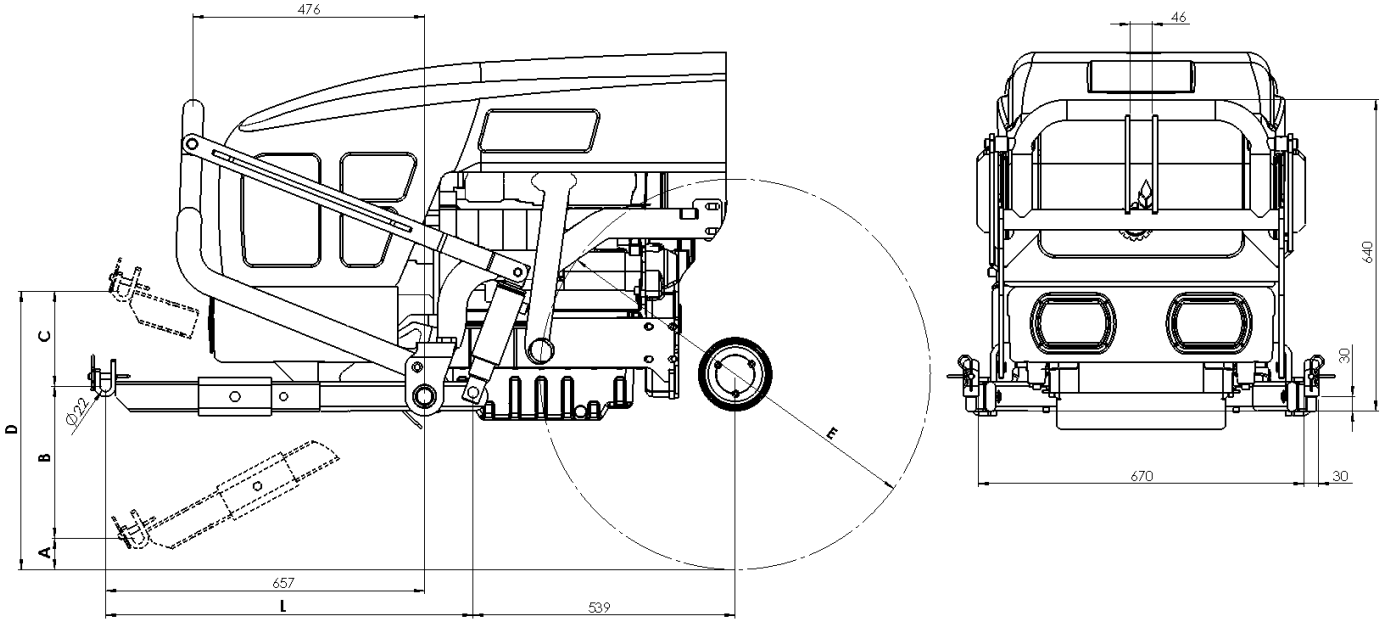

Height of front lift mechanism according to tyres (measured from ground). All measurements in mm.

AGT 850											
Tyres	E	L				A				B	
		L1	L2	L3	L4	A1	A2	A3	A4	B1	B2
7.5x16	803	706	756	806	856	89	65	41	18	290	314
260/70 R16	770					72	48	25	1		
250/80 R18	870					123	99	75	52		
280/70 R18	849					112	88	64	41		
300/65 R18	850					112	88	65	41		
31x15.5-15	800					87	63	40	16		
27x10.5-15	683					29	5	-19	-42		
		B		C				D			
		B3	B4	C1	C2	C3	C4	D1	D2	D3	D4
7.5x16	803	337	361	180	194	210	224	558	573	588	602
260/70 R16	770							541	556	571	586
250/80 R18	870							592	607	622	636
280/70 R18	849							581	596	611	625
300/65 R18	850							581	596	611	626
31x15.5-15	800							556	571	586	601
27x10.5-15	683							498	513	528	542

E – wheel diameter
L1, L2, L3, L4 – length of adjustable arms
A – minimum height of front lift mechanism
B – maximum arm lowering
C – maximum arm lifting
D – maximum height of front lift mechanism

REAR TOWING HOOK HEIGHT

TYPE 1

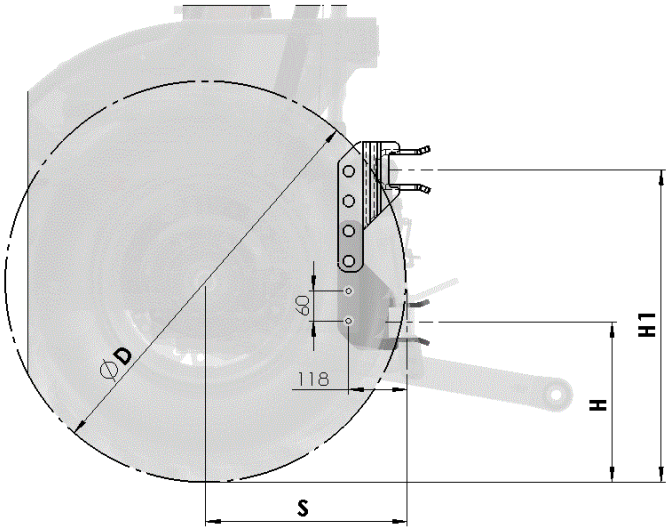

TYPE 2

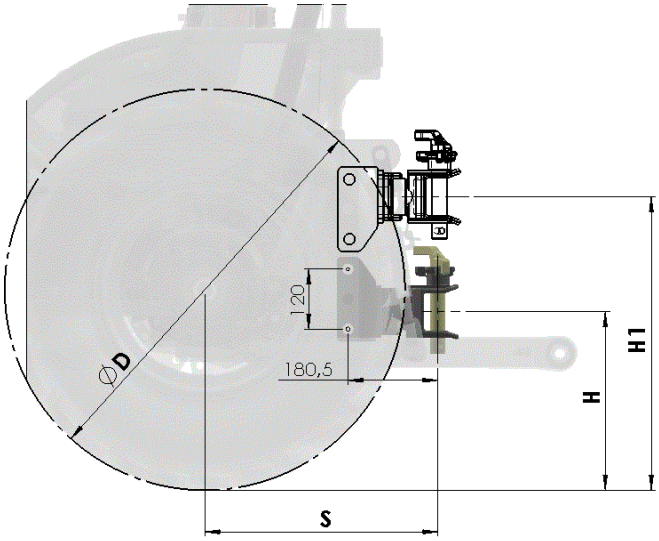

AGT 850							
		TIP 1			TIP 2		
Tyres	Diameter (D) in mm	S	H	H1	S	H	H1
7.5x16	803	405	320	625.5	467.5	357	588
260/70 R16	770		303	609		341	571
250/80 R18	870		353	659		390,5	621,5
280/70 R18	849		342.5	648.5		380	611
300/65 R18	850		343	649		381	611
31x15.5-15	800		318	624		356	586
27x10.5-15	683		260	566		297.5	528

TRACTOR WEIGHT

Measured without trailer or weights, with empty fuel tank

AGT 850 (R/NR)						
Tyres	Description	Unit of measurement	With roll bar		With cabin	
			Without driver	With driver	Without driver	With driver
7,5x16	Total weight	kg	1280	1355	1410	1485
	Weight on front axle	kg	800	815	820	835
	Weight on rear axle	kg	480	540	590	650

AGT 850 (front lift mechanism)						
Tyres	Description	Unit of measurement	With roll bar		With cabin	
			Without driver	With driver	Without driver	With driver
280/70 R18	Total weight	kg	-	-	1590	1665
	Weight on front axle	kg	-	-	1000	1015
	Weight on rear axle	kg	-	-	590	650

AGT 860 (wide version)						
Tyres	Description	Unit of measurement	With roll bar		With cabin	
			Without driver	With driver	Without driver	With driver
280/70 R18	Total weight	kg	-	-	1650	1725
	Weight on front axle	kg	-	-	950	965
	Weight on rear axle	kg	-	-	700	760

AGT 860 (premium hydraulic)						
Tyres	Description	Unit of measurement	With roll bar		With cabin	
			Without driver	With driver	Without driver	With driver
280/70 R18	Skupna teža	kg	1610	1685	-	-
	Teža na prednji osi	kg	1030	1045	-	-
	Teža na zadnji osi	kg	580	640	-	-

MAXIMUM TECHNICALLY ALLOWED TRACTOR WEIGHT

AGT 850			
Maximum technically allowed weight (kg)		Maximum allowed load (kg)	
2000			
Front axle	Rear axle	Front axle	Rear axle
900	1100	1250	1500

MAXIMUM LOAD ON AXLES AND IN CONNECTION POINT

AGT 850				
Tyres	Axle load		Tyre load capacity (kg)	Maximum load on connection point (kg)
	Weight on front axle (kg)	Weight on rear axle (kg)		
7.5x16	1000	1200	675	580
260/70 R16			965	
250/80 R18			945	
280/70 R18			1100	
300x65 R18			-	
27x10.5-15			820	
31x15.5-15			800	

MAXIMUM TENSILE LOAD OF CONNECTION POINT

AGT 850	
Braking type	Technically allowed weight of towed implement (kg)
Towed implement without independent brakes	1300
Towed implement with inertia brake	3900
Towed implement with independent (mechanical) brake	3900

WEIGHTS

AGT 850							
Type	Material	Weight (kg)	Installation position	Fastening	Amount of weights (per wheel)	Amount of weights (per axle)	Amount of weights (maximum total weight on tractor) (kg)
Rear weight	Concrete	340	Rear lift mechanism	Connection points (bolts)	-	-	1 (340)
Wheel weights	Grey cast iron (Sl)	40	wheel 7.5x16	Rim centre (4 bolts)	1	2	4 (160)
			wheel 7.5x18		1	2	
			wheel 260/70 R16		1	2	
			wheel 250/80 R18		1	2	
			wheel 280/70 R18		1	2	
			wheel 300x65 R18		1	2	
		50	wheel 27x10.5-15		1	2	4 (200)
			wheel 31x15.5-15		1	2	

NOISE LEVEL

AGT 850					
Description		Number of revolutions (min^{-1})	Measured value dB (A)		
			With roll bar	With cabin	
Sound level in tractor surroundings	Sound level at tractor standstill	2800	79	79	
	Sound level at tractor driving		81	81	
Sound level in driver's seat	Sound level at driver		84	Open	Closed
				84	83

INCLINATION

AGT 850				
Tractor position		Measured value (α)		Notes
		Roll bar	Cabin	
Tractor in inclined position (lateral stability)	Sliding	48°	37°	Stability test for tractor AGT 850 (wide version): - tyres 31x15.5-15 (grass tread) - wheelbase 1337 mm - axle length 1580 mm - wheel width 394 mm - wheel diameter 770 mm
	Roll-over	60°	51°	

TECHNICAL DATA

TRACTOR TECHNICAL DATA			TRACTOR TYPE			
			AGT 850	AGT 850 NR	AGT 860	AGT 860 NR
Engine			Lombardini LDW 2204/B1		Lombardini LDW 2204 T/B1	
Type			4-stroke, diesel		4-stroke, turbo-diesel	
Work capacity		cm^3	2199			
Engine power		kW/KM	35.2/48		45/61.2	
Max. torque		Nm	132 at 1800 min^{-1}		178 at 1700 min^{-1}	
Max. number of revolutions		min^{-1}	2800			
Cylinders/aspiration		Nr./type	4/atmospheric		4/turbo	
Cylinder diameter/travel		mm	88/90.4			
Compression ration			22.5:1		22.8:1	
Fuel pump			Lombardini 6590.376			
Injectors			Bosch SDN 0 SD 301			
Cooling			water			
Fuel consumption		g/kWh	260			
CO^2 emission		g/kWh	1.064		0.657	
Oil capacity		L (15W-40)	5,4			
Coolant capacity		l	7			
Fuel tank capacity		l	33		31	
Transmission			Constant 4-wheel drive			
Gearbox			Synchronized, 24 gears (12 forward/12 reverse)			
Max. speed		km/h	30			
Clutch			6-disc in oil bath			
Rear connection shaft			Standard 1 3/8″ (34.9mm) – 6 grooves DIN 9611			
			Elektro-hydraulic control	Mechanic control	Elektro-hydraulic control	Mechanic control
Connection shaft speed		min^{-1}	540/synchronized with gearbox	540/750	540/synchronized with gearbox	540/750
Work brake			Brake discs in oil baths, mechanical control with pedal			
Handbrake			Mechanical control through lever on work brake			
Front and rear differential lock			Elektro-hydraulic control	Mechanic control	Elektro-hydraulic control	Mechanic control
Transmission oil capacity		l (SAE 10W-30)	19	18	19	18
Front axle						
Steering system			Hydraulic, front			
Oil capacity		l (85W-90)	4,5			
Reducers						
Oil capacity		l (85W-90)	0,8 (to axle) / 0,4 (to reducer)			
Hydraulic system						
Oil filter insert		µ (mesh)	60			
Hydraulic pump						
Steering wheel	Volume/max. pressure	cm^3	4,35 / 120			
	Capacity at 2800 min^{-1}	l/min	13,2			
Work	Volume/max. pressure	cm^3	11 / 160			
	Capacity at 2800 min^{-1}	l/min	33,5			

TRACTOR TECHNICAL DATA		TRACTOR TYPE			
		AGT 850	AGT 850 NR	AGT 860	AGT 860 NR
Rear lift system		Hydraulic, with three-point hitch, I category			
Lifting capacity	kg	1240			
Hydraulic connections		for single/double-acting cylinder for quick connection of work functions (3+)			
Front lift system		Hydraulic, with three-point hitch, I category			
Lifting capacity	kg	450			
Hydraulic connections		for single/double-acting cylinder for quick connection of work functions (2)			
Electrical system					
Supply voltage	V	12			
Alternator	V-A-W	14-45-540			
Electric starter	V-kW	12-2.2			
Battery	V-Ah	12-73			
Lights					
Low beam	W	40			
High beam	W	45			
Position lights (front)	W	5			
Indicators	W	21			
Position lights (rear)	W	5			
Brake light	W	21			
Plate light	W	5			

CONNECTION SHAFT

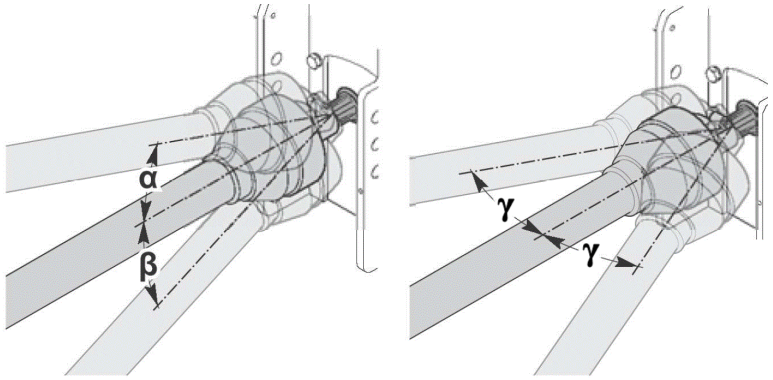

Description	Symbol	Greatest deflection
Vertical movement up	α	45°
Vertical movement down	β	30°
Side movement (with installed lift mechanism)	γ	35°
Side movement (without installed lift mechanism)	γ	55°

CONNECTION SHAFT SPEED TABLE

REVERSIBLE TRACTOR VERSION (R)

Connection shaft, driven by engine										
Gear ration engine/connection shaft	Engine revolutions									
	1000	1200	1400	1600	1800	2000	2200	2400	2600	2800
	Connection shaft revolutions									
4.77	209.6	251.6	293.5	335.4	377.4	419.3	461.2	503.1	545	587

Connection shaft, driven by gearbox - activation										
Gear	Gear ration	Engine revolutions									
		1000	1200	1400	1600	1800	2000	2200	2400	2600	2800
		Connection shaft revolutions									
		Driving forward									
N-1Z	5.9	168.9	202.6	236.4	270.2	303.9	337.7	371.5	405.2	439	472.8
N-1Ž	23.4	42.7	51.2	59.7	68.3	76.8	85.3	93.8	102.4	110.9	119.4
N-1P	87.7	11.4	13.7	16	18.2	20.5	22.8	25.1	27.4	29.6	31.9
N-2Z	3.9	253.3	303.9	354.6	405.2	455.9	506.6	557.2	607.9	658.5	709.2
N-2Ž	12.6	79.3	95.2	111.1	126.9	142.8	158.6	174.5	190.4	206.2	222.1
N-2P	49.9	20	24	28.1	32.1	36.1	40.1	44.1	48.1	52.1	56.1
N-3Z	2.7	371.5	445.8	520.1	594.4	668.6	742.9	817.2	891.5	965.8	1040.1
N-3Ž	10.7	93.8	112.6	131.4	150.2	168.9	187.7	206.5	225.2	244	262.8
N-3P	39.9	25.1	30.1	35.1	40.1	45.1	50.2	55.2	60.2	65.2	70.2
N-4Z	2	499	598.9	698.7	798.5	898.3	998.1	1097.9	1197.7	1297.5	1397.3
N-4Ž	7.9	126.1	151.3	176.5	201.7	226.9	252.2	277.4	302.6	327.8	353
N-4P	29.7	33.7	40.4	47.2	53.9	60.6	67.4	74.1	80.9	87.6	94.3
		Driving reverse									
R-1Z	5.4	185.1	222.1	259.1	296.1	333.2	370.2	407.2	444.2	481.2	518.2
R-1Ž	21.4	46.8	56.1	65.5	74.8	84.2	93.5	102.9	112.2	121.6	130.9
R-1P	80	12.5	15	17.5	20	22.5	25	27.5	30	32.5	35
R-2Z	3.4	291.5	349.8	408.1	466.4	524.7	583	641.3	699.6	757.9	816.2
R-2Ž	13.6	73.6	88.4	103.1	117.8	132.6	147.3	162	176.7	191.5	206.2
R-2P	50.8	19.7	23.6	27.6	31.5	35.4	39.4	43.3	47.2	51.2	55.1
R-3Z	2.5	407.2	488.6	570.1	651.5	732.9	814.4	895.8	977.3	1058.7	1140.1
R-3Ž	9.7	102.9	123.4	144	164.6	185.2	205.7	226.3	246.9	267.5	288
R-3P	36.4	27.5	33	38.5	44	49.5	55	60.5	66	71.5	77
R-4Z	1.8	547	656.4	765.8	875.3	984.7	1094.1	1203.5	1312.9	1422.3	1531.7
R-4Ž	7.2	138.2	165.8	193.5	221.1	248.8	276.4	304	331.7	359.3	387
R-4P	27.1	36.9	44.3	51.7	59.1	66.5	73.9	81.2	88.6	96	103.4

IRREVERSIBLE TRACTOR VERSION (NR)

Connection shaft, driven by engine											
Gear ration engine/connection shaft		Engine revolutions									
		1000	1200	1400	1600	1800	2000	2200	2400	2600	2800
		Connection shaft revolutions									
Lever shift (540)	4.83	207	248.4	289.9	331.3	372.7	414.1	455.5	496.9	538.3	579.7
Lever shift (750)	3.67	272.5	327	381.5	436	490.5	545	599.5	654	708.4	762.9

Connection shaft, driven by gearbox – lever shift (540)											
Gear	Gear ration	Engine revolutions									
		1000	1200	1400	1600	1800	2000	2200	2400	2600	2800
		Connection shaft revolutions									
		Driving forward									
N-1Z	4.6	219.7	263.7	307.6	351.6	395.5	439.5	483.4	527.4	571.3	615.3
N-1Ž	18	55.5	66.6	77.7	88.8	99.9	111	122.1	133.2	144.3	155.4
N-1P	67.4	14.8	17.8	20.8	23.7	26.7	29.7	32.6	35.6	38.6	41.5
N-2Z	3	329.6	395.5	461.5	527.4	593.3	659.2	725.2	791.1	857	922.9
N-2Ž	9.7	103.2	123.9	144.5	165.2	185.8	206.5	227.1	247.8	268.4	289.1
N-2P	38.3	26.1	31.3	36.5	41.7	46.9	52.2	57.4	62.6	67.8	73
N-3Z	2.1	483.4	580.1	676.8	773.5	870.2	966.9	1063.6	1160.3	1257	1353.7
N-3Ž	8.2	122.1	146.6	171	195.4	219.8	244.3	268.7	293.1	317.5	342
N-3P	30.6	32.6	39.2	45.7	52.2	58.7	65.3	71.8	78.3	84.9	91.4
N-4Z	1.5	649.5	779.4	909.3	1039.2	1169.1	1299	1428.9	1558.7	1688.6	1818.5
N-4Ž	6.1	164.1	196.9	229.7	262.5	295.3	328.2	361	393.8	426.6	459.4
N-4P	22.8	43.8	52.6	61.4	70.2	78.9	87.7	96.5	105.2	114	122.8
		Driving reverse									
R-1Z	4.2	240.9	289.1	337.2	385.4	433.6	481.8	529.9	578.1	626.3	674.5
R-1Ž	16.4	60.9	73.0	85.2	97.4	109.5	121.7	133.9	146	158.2	170.4
R-1P	61.5	16.3	19.5	22.8	26	29.3	32.5	35.8	39	42.3	45.5
R-2Z	2.6	379.4	455.3	531.1	607	682.9	758.8	834.6	910.5	986.4	1062.3
R-2Ž	10.4	95.8	115	134.2	153.4	172.5	191.7	210.9	230	249.2	268.4
R-2P	39	25.6	30.7	35.9	41	46.1	51.2	56.3	61.5	66.6	71.7
R-3Z	1.9	529.9	635.9	741.9	847.9	953.9	1059.9	1165.9	1271.8	1377.8	1483.8
R-3Ž	7.5	133.9	160.7	187.4	214.2	241	267.8	294.5	321.3	348.1	374.9
R-3P	28	35.8	42.9	50.1	57.2	64.4	71.6	78.7	85.9	93	100.2
R-4Z	1.4	711.9	854.3	996.7	1139.1	1281.5	1423.9	1566.2	1708.6	1851	1993.4
R-4Ž	5.6	179.9	215.8	251.8	287.8	323.7	359.7	395.7	431.7	467.6	503.6
R-4P	20.8	48.1	57.7	67.3	76.9	86.5	96.1	105.7	115.4	125	134.6

Connection shaft, driven by gearbox – lever shift (750)											
Gear	Gear ratio	Engine revolutions									
		1000	1200	1400	1600	1800	2000	2200	2400	2600	2800
		Connection shaft revolutions									
		Driving forward									
N-1Z	6	166.7	200	233.4	266.7	300.1	333.4	366.8	400.1	433.4	466.8
N-1Ž	23.7	42.1	50.5	59	67.4	75.8	84.2	92.7	101.1	109.5	117.9
N-1P	88.9	11.3	13.5	15.8	18	20.3	22.5	24.8	27	29.3	31.5
N-2Z	4	250.1	300.1	350.1	400.1	450.1	500.1	550.1	600.1	650.2	700.2
N-2Ž	12.8	78.3	94	109.6	125.3	141	156.6	172.3	188	203.6	219.3
N-2P	50.5	19.8	23.7	27.7	31.7	35.6	39.6	43.5	47.5	51.4	55.4
N-3Z	2.7	366.8	440.1	513.5	586.8	660.2	733.5	806.9	880.2	953.6	1026.9
N-3Ž	10.8	92.7	111.2	129.7	148.2	166.8	185.3	203.8	222.4	240.9	259.4
N-3P	40.4	24.8	29.7	34.7	39.6	44.6	49.5	54.5	59.4	64.4	69.3
N-4Z	2	492.7	591.2	689.8	788.3	886.9	985.4	1084	1182.5	1281	1379.6
N-4Ž	8	124.5	149.4	174.3	199.2	224.1	248.9	273.8	298.7	323.6	348.5
N-4P	30.1	33.3	39.9	46.6	53.2	59.9	66.5	73.2	79.8	86.5	93.1
		Driving reverse									
R-1Z	5.5	182.7	219.3	255.8	292.4	328.9	365.5	402	438.6	475.1	511.7
R-1Ž	21.7	46.2	55.4	64.6	73.9	83.1	92.3	101.6	110.8	120	129.3
R-1P	81.1	12.3	14.8	17.3	19.7	22.2	24.7	27.1	29.6	32.1	34.5
R-2Z	3.5	287.8	345.4	402.9	460.5	518.1	575.6	633.2	690.7	748.3	805.9
R-2Ž	13.8	72.7	87.3	101.8	116.3	130.9	145.4	160	174.5	189	203.6
R-2P	51.5	19.4	23.3	27.2	31.1	35	38.9	42.7	46.6	50.5	54.4
R-3Z	2.5	402	482.4	562.8	643.2	723.6	804	884.4	964.8	1045.2	1125.6
R-3Ž	9.8	101.6	121.9	142.2	162.5	182.8	203.1	223.4	243.7	264.1	284.4
R-3P	36.8	27.1	32.6	38	43.4	48.9	54.3	59.7	65.1	70.6	76
R-4Z	1.9	540.1	648.1	756.1	864.1	972.2	1080.2	1188.2	1296.2	1404.2	1512.2
R-4Ž	7.3	136.4	163.7	191	218.3	245.6	272.9	300.2	327.5	354.7	382
R-4P	27.4	36.5	43.8	51	58.3	65.6	72.9	80.2	87.5	94.8	102.1

CONNECTION SHAFT TORQUE (PTO)

REVERSIBLE TRACTOR VERSION (R)

AGT 850 R					
Driven by engine					
Engine torque (Nm)		**Connection shaft (PTO)**		**Connection shaft clutch**	
		Gear ratio (i)	**Connection shaft torque (Nm)**	**Gear ratio (i)**	**Clutch torque (Nm)**
132		4,77	630	2,684	354
Driven by transmission					
Engine torque (Nm)	**Gear**	**Connection shaft (PTO)**		**Connection shaft clutch**	
		Gear ratio (i)	**Connection shaft torque (Nm)**	**Gear ratio (i)**	**Clutch torque (Nm)**
Driving forward					
132	N-1Z	5,9	782	3,3	440
	N-1Ž	23,4	3094	13,2	1741
	N-1P	87,7	11580	49,4	6516
	N-2Z	3,9	521	2,2	293
	N-2Ž	12,6	1664	7,1	936
	N-2P	49,9	6587	28,1	3706
	N-3Z	2,7	355	1,5	200
	N-3Ž	10,7	1407	6	791
	N-3P	39,9	5263	22,4	2962
	N-4Z	2	265	1,1	149
	N-4Ž	7,9	1047	4,5	589
	N-4P	29,7	3918	16,7	2205
Driving in reverse					
132	R-1Z	5,4	713	3	401
	R-1Ž	21,4	2823	12	1588
	R-1P	80	10564	45	5944
	R-2Z	3,4	453	1,9	255
	R-2Ž	13,6	1792	7,6	1009
	R-2P	50,8	6707	28,6	3774
	R-3Z	2,5	324	1,4	182
	R-3Ž	9,7	1283	5,5	722
	R-3P	36,4	4802	20,5	2702
	R-4Z	1,8	241	1	136
	R-4Ž	7,2	955	4,1	537
	R-4P	27,1	3574	15,2	2011

AGT 860 R					
Driven by engine					
Engine torque (Nm)	**Connection shaft (PTO)**		**Connection shaft clutch**		
	Gear ratio (i)		**Connection shaft torque (Nm)**	**Gear ratio (i)**	**Clutch torque (Nm)**
178	4,77		849	2,684	478
Driven by transmission					
Engine torque (Nm)	**Gear**	**Connection shaft (PTO)**		**Connection shaft clutch**	
		Gear ratio (i)	**Connection shaft torque (Nm)**	**Gear ratio (i)**	**Clutch torque (Nm)**
Driving forward					
178	N-1Z	5,9	1054	3,3	593
	N-1Ž	23,4	4173	13,2	2348
	N-1P	87,7	15615	49,4	8786
	N-2Z	3,9	703	2,2	395
	N-2Ž	12,6	2244	7,1	1263
	N-2P	49,9	8882	28,1	4998
	N-3Z	2,7	479	1,5	270
	N-3Ž	10,7	1897	6	1067
	N-3P	39,9	7098	22,4	3994
	N-4Z	2	357	1,1	201
	N-4Ž	7,9	1412	4,5	794
	N-4P	29,7	5283	16,7	2973
Driving in reverse					
178	R-1Z	5,4	962	3	541
	R-1Ž	21,4	3807	12	2142
	R-1P	80	14245	45	8016
	R-2Z	3,4	611	1,9	344
	R-2Ž	13,6	2417	7,6	1360
	R-2P	50,8	9045	28,6	5089
	R-3Z	2,5	437	1,4	246
	R-3Ž	9,7	1730	5,5	974
	R-3P	36,4	6475	20,5	3643
	R-4Z	1,8	325	1	183
	R-4Ž	7,2	1288	4,1	725
	R-4P	27,1	4820	15,2	2712

IRREVERSIBLE TRACTOR VERSION (NR)

AGT 850 NR					
Driven by engine					
Engine torque (Nm)	**Connection shaft (540)**			**Connection shaft (750)**	
	Gear ratio (i)		**Connection shaft torque (Nm)**	**Gear ratio (i)**	**Connection shaft torque (Nm)**
132	4,83		638	3,67	484
Driven by transmission					
Engine torque (Nm)	**Gear**	**Connection shaft (540)**		**Connection shaft (750)**	
		Gear ratio (i)	**Connection shaft torque (Nm)**	**Gear ratio (i)**	**Connection shaft torque (Nm)**
Driving forward					
132	N-1Z	6	792	4,6	601
	N-1Ž	23,7	3134	18	2378
	N-1P	88,9	11729	67,4	8898
	N-2Z	4	528	3	400
	N-2Ž	12,8	1685	9,7	1279
	N-2P	50,5	6672	38,3	5061
	N-3Z	2,7	360	2,1	273
	N-3Ž	10,8	1425	8,2	1081
	N-3P	40,4	5331	30,6	4044
	N-4Z	2	268	1,5	203
	N-4Ž	8	1060	6,1	804
	N-4P	30,1	3968	22,8	3010
Driving in reverse					
132	R-1Z	5,5	722	4,2	548
	R-1Ž	21,7	2859	16,4	2169
	R-1P	81,1	10700	61,5	8117
	R-2Z	3,5	459	2,6	348
	R-2Ž	13,8	1815	10,4	1377
	R-2P	51,5	6794	39	5154
	R-3Z	2,5	328	1,9	249
	R-3Ž	9,8	1300	7,5	986
	R-3P	36,8	4864	28	3690
	R-4Z	1,9	244	1,4	185
	R-4Ž	7,3	967	5,6	734
	R-4P	27,4	3620	20,8	2746

TRACTOR SPEED

Speed of tractor AGT 850 with maximum torque and **1800 engine revolutions** per minute.

AGT 850								
Tyre	**Diameter (mm)**	**Gear**	**Speed FORWARD (km/h)**			**Speed REVERSE (km/h)**		
			Z	**Ž**	**P**	**Z**	**Ž**	**P**
7.5X16	803	1	5,9	1,5	0,4	6,4	1,6	0,4
		2	8,8	2,8	0,7	10,1	2,6	0,7
		3	12,9	3,3	0,9	14,1	3,6	1,0
		4	17,3	4,4	1,2	19,0	4,8	1,3
7.5X18	855	1	6,2	1,6	0,4	6,8	1,7	0,5
		2	9,4	2,9	0,7	10,8	2,7	0,7
		3	13,7	3,5	0,9	15,0	3,8	1,0
		4	18,4	4,7	1,2	20,2	5,1	1,4
260/70 R16	770	1	5,6	1,4	0,4	6,2	1,6	0,4
		2	8,4	2,6	0,7	9,7	2,4	0,7
		3	12,4	3,1	0,8	13,5	3,4	0,9
		4	16,6	4,2	1,1	18,2	4,6	1,2
280/70 R18	849	1	6,2	1,6	0,4	6,8	1,7	0,5
		2	9,3	2,9	0,7	10,7	2,7	0,7
		3	13,6	3,4	0,9	14,9	3,8	1,0
		4	18,3	4,6	1,2	20,1	5,1	1,4
31X15.5-15	800	1	5,8	1,5	0,4	6,4	1,6	0,4
		2	8,7	2,7	0,7	10,1	2,5	0,7
		3	12,8	3,2	0,9	14,1	3,6	0,9
		4	17,2	4,4	1,2	18,9	4,8	1,3
27X10.5-15	683	1	5,0	1,3	0,3	5,5	1,4	0,4
		2	7,5	2,3	0,6	8,6	2,2	0,6
		3	11,0	2,8	0,7	12,0	3,0	0,8
		4	14,7	3,7	1,0	16,1	4,1	1,1
300/65 R18	850	1	6,2	1,6	0,4	6,8	1,7	0,5
		2	9,3	2,9	0,7	10,7	2,7	0,7
		3	13,6	3,4	0,9	14,9	3,8	1,0
		4	18,3	4,6	1,2	20,1	5,1	1,4
250/80 R18	870	1	6,3	1,6	0,4	7,0	1,8	0,5
		2	9,5	3,0	0,8	11,0	2,8	0,7
		3	14,0	3,5	0,9	15,3	3,9	1,0
		4	18,7	4,7	1,3	20,6	5,2	1,4

Speed of tractor AGT 860 with maximum torque and **1700 engine revolutions** per minute.

Tyre								
Tyre	**Diameter (mm)**	**Gear**	**Speed FORWARD (km/h)**			**Speed REVERSE (km/h)**		
			Z	**Ž**	**P**	**Z**	**Ž**	**P**
7.5X16	803	1	5,5	1,4	0,4	6,1	1,5	0,4
		2	8,3	2,6	0,7	9,5	2,4	0,6
		3	12,2	3,1	0,8	13,3	3,4	0,9
		4	16,3	4,1	1,1	17,9	4,5	1,2
7.5X18	855	1	5,9	1,5	0,4	6,5	1,6	0,4
		2	8,8	2,8	0,7	10,2	2,6	0,7
		3	13,0	3,3	0,9	14,2	3,6	1,0
		4	17,4	4,4	1,2	19,1	4,8	1,3
260/70 R16	770	1	5,3	1,3	0,4	5,8	1,5	0,4
		2	8,0	2,5	0,6	9,2	2,3	0,6
		3	11,7	2,9	0,8	12,8	3,2	0,9
		4	15,7	4,0	1,1	17,2	4,3	1,2
280/70 R18	849	1	5,8	1,5	0,4	6,4	1,6	0,4
		2	8,8	2,7	0,7	10,1	2,5	0,7
		3	12,9	3,2	0,9	14,1	3,6	1,0
		4	17,3	4,4	1,2	18,9	4,8	1,3
31X15.5-15	800	1	5,5	1,4	0,4	6,0	1,5	0,4
		2	8,3	2,6	0,7	9,5	2,4	0,6
		3	12,1	3,1	0,8	13,3	3,4	0,9
		4	16,3	4,1	1,1	17,8	4,5	1,2
27X10.5-15	683	1	4,7	1,2	0,3	5,2	1,3	0,3
		2	7,1	2,2	0,6	8,1	2,1	0,5
		3	10,3	2,6	0,7	11,3	2,9	0,8
		4	13,9	3,5	0,9	15,2	3,8	1,0
300/65 R18	850	1	5,9	1,5	0,4	6,4	1,6	0,4
		2	8,8	2,7	0,7	10,1	2,6	0,7
		3	12,9	3,3	0,9	14,1	3,6	1,0
		4	17,3	4,4	1,2	19,0	4,8	1,3
250/80 R18	870	1	6,0	1,5	0,4	6,6	1,7	0,4
		2	9,0	2,8	0,7	10,3	2,6	0,7
		3	13,2	3,3	0,9	14,4	3,6	1,0
		4	17,7	4,5	1,2	19,4	4,9	1,3

Speed of tractor AGT 850 and AGT 860 with maximum **2800 engine revolutions** per minute.

AGT 850								
Tyre	**Diameter (mm)**	**Gear**	**Speed FORWARD (km/h)**			**Speed REVERSE (km/h)**		
			Z	**Ž**	**P**	**Z**	**Ž**	**P**
7.5X16	803	1	9,1	2,3	0,6	10,0	2,5	0,7
		2	13,7	4,3	1,1	15,7	4,0	1,1
		3	20,0	5,1	1,4	22,0	5,5	1,5
		4	26,9	6,8	1,8	29,5	7,5	2,0
7.5X18	855	1	9,7	2,4	0,7	10,6	2,7	0,7
		2	14,5	4,6	1,2	16,7	4,2	1,1
		3	21,3	5,4	1,4	23,4	5,9	1,6
		4	28,7	7,2	1,9	31,4	7,9	2,1
260/70 R16	770	1	8,7	2,2	0,6	9,6	2,4	0,6
		2	13,1	4,1	1,0	15,1	3,8	1,0
		3	19,2	4,9	1,3	21,1	5,3	1,4
		4	25,8	6,5	1,7	28,3	7,1	1,9
280/70 R18	849	1	9,6	2,4	0,7	10,6	2,7	0,7
		2	14,4	4,5	1,1	16,6	4,2	1,1
		3	21,2	5,4	1,4	23,2	5,9	1,6
		4	28,5	7,2	1,9	31,2	7,9	2,1
31X15.5-15	800	1	9,1	2,3	0,6	9,9	2,5	0,7
		2	13,6	4,3	1,1	15,7	4,0	1,1
		3	20,0	5,0	1,3	21,9	5,5	1,5
		4	26,8	6,8	1,8	29,4	7,4	2,0
27X10.5-15	683	1	7,7	2,0	0,5	8,5	2,1	0,6
		2	11,6	3,6	0,9	13,4	3,4	0,9
		3	17,0	4,3	1,2	18,7	4,7	1,3
		4	22,9	5,8	1,5	25,1	6,3	1,7
300/65 R18	850	1	9,6	2,4	0,7	10,6	2,7	0,7
		2	14,5	4,5	1,1	16,6	4,2	1,1
		3	21,2	5,4	1,4	23,2	5,9	1,6
		4	28,5	7,2	1,9	31,2	7,9	2,1
250/80 R18	870	1	9,9	2,5	0,7	10,8	2,7	0,7
		2	14,8	4,6	1,2	17,0	4,3	1,2
		3	21,7	5,5	1,5	23,8	6,0	1,6
		4	29,2	7,4	2,0	32,0	8,1	2,2